A Supplement Protocol for BGP - Source Policy Route Discovery

Jyh-haw Yeh, Wei Zhang

Dept. of Computer Science, Boise State University

Chung-wei Lee

Dept. of Computer Science & Software Engineering, Auburn University

Wen-chen Hu

Dept. of Computer Science, University of North Dakota

OUTLINE

- INTRODUCTION
  - Policy Routing
  - IDPR - Link State Approach
  - BGP - Distance Vector Approach

- BORDER GATEWAY PROTOCOL 4
  - BGP
  - Deficiency

- SOURCE POLICY ROUTE DISCOVERY
  - Purpose, Preliminary and approach
  - Search Scenario
  - Discovery Message Format

- CURRENT STATUS FOR THE PROJECT

INTRODUCTION

POLICY ROUTING

Why ?

Packets may be silently dropped due to violation of intermediate domain's policy

What ?

Routing protocols for finding feasible domain routes to solve the above problem

How ?

Link State VS. Distance Vector

INTRODUCTION

INTERDOMAIN POLICY ROUTING (IDPR) – Link State Approach

Approach :

Huge databases for Internet topology and all other domain policies

Mechanism :

Source computes feasible routes based on its databases

Disadvantage :

Not practical due to storage requirement

INTRODUCTION

BORDER GATEWAY PROTOCOL (BGP) – Distance Vector Approach

Approach :

Advertise routing information through BGP Update messages

Mechanism :

Each router picks a route advertisement based on its own policy

Disadvantage :

Advertisements may be screened out during their journeys; but still more practical than IDPR

BORDER GATEWAY PROTOCOL (BGP)

Logic Inside a BGP Speaking Router

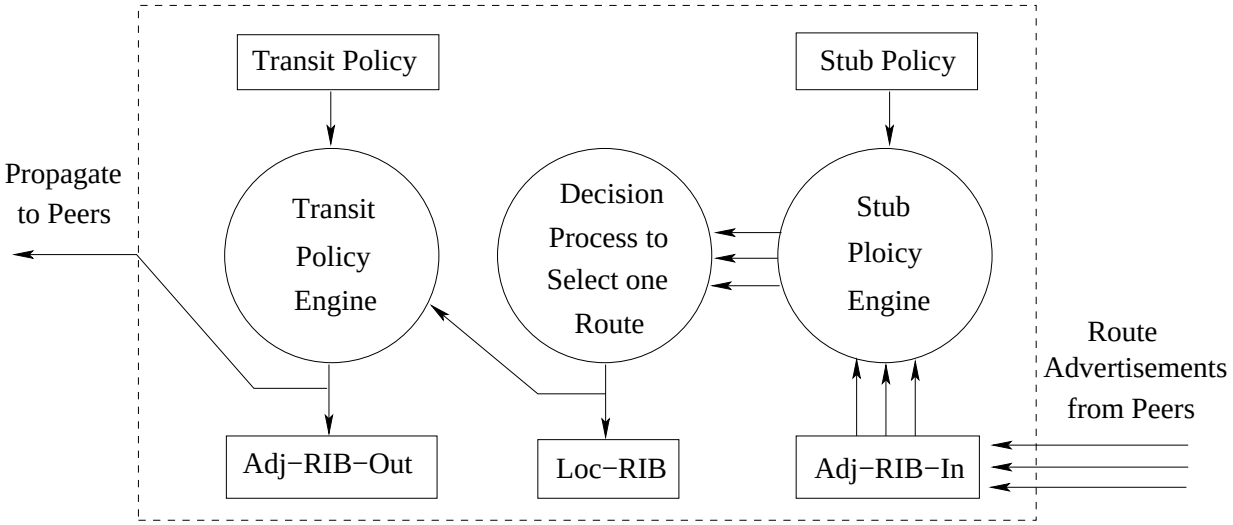

A BGP Speaking Router

BGP Deficiency

A, B, C, D, E, G : no specific policies except shortest path

F : excludes all routes containing B

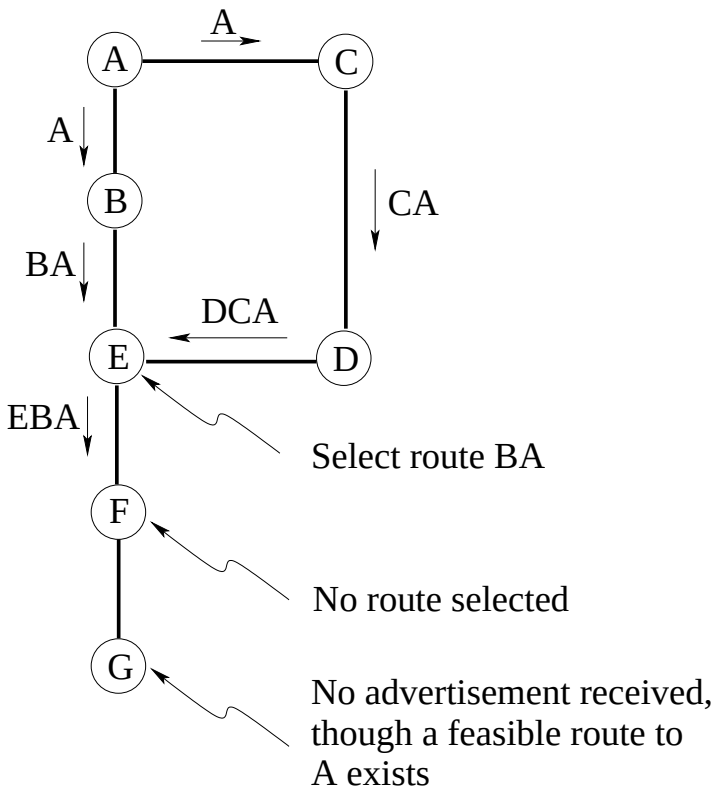

SOURCE POLICY ROUTE DISCOVERY

Purpose

Overcome or supplement the BGP deficiency

Preliminary

A new path attr NUM_PATH is added to BGP update messages indicating number of known routes from here

A new database Source-RIB for storing discovered routes.

Approach

Depth First Search based on NUM_PATH information

SOURCE POLICY ROUTE DISCOVERY

Search Scenario

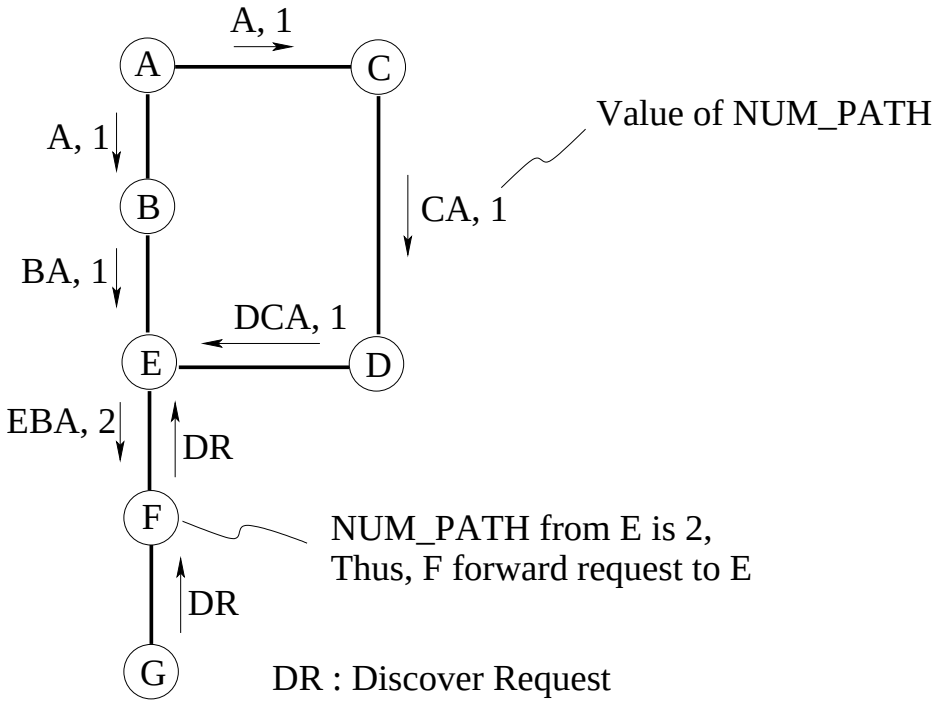

SOURCE POLICY ROUTE DISCOVERY

Format for a Discovery Message

Message Fields	Description
Source	Indicate the originator ID of this message
Destination	An IP prefix for destination
Type	Request, Reply or Trace back
AS_set	ASs have been visited so far
AS_path	A simple AS path this message has traveled from source to the AS currently passing the message
Hop_count	Terminate an unbounded discovery procedure
Depth_count	Specify how deep from source the message should go before tracing back in a DFS search
Excluded_ASs	Those ASs should be excluded from a discovered policy route
Preferred_ASs	Those ASs are preferred for a discovered policy route
Degree of Preference	Discard a route if its degree of preference is lower than this value

CURRENT STATUS FOR THE PROJECT

- A research network cluster with 8 nodes
- A simulation program in C++ has been written
- PVM (Parallel Virtual Machine) is used to run the simulation
- Use Inet (from U of Michigan) to generate Internet topology with 3,000 domains
- Performance eval model has been defined
  - Percentage for activating discovery procedure
  - (Extra network load) per (beneficial communication)